Current part is item (18) on diagram. Available at www.oshkoshequipment.com


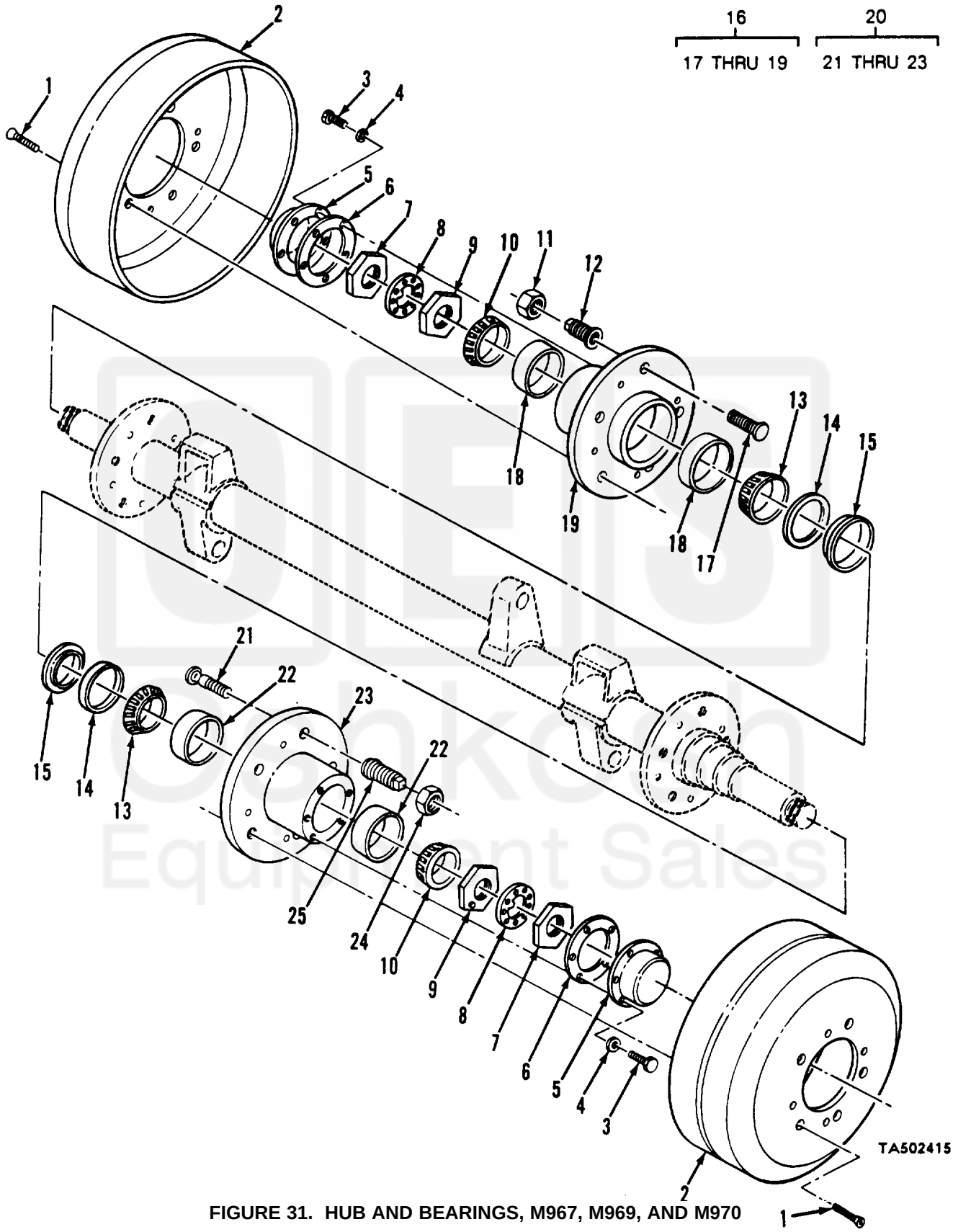


FIGURE 31. HUB AND BEARINGS, M967, M969, AND M970
(EXCEPT M970 TC-0843, TC-0844, AND TC-103 THRU TC-178).

Current part is item (18) on diagram. Available at www.oshkoshequipment.com

Current part is item (18) on diagram. Available at www.oshkoshequipment.com



| | (1) ITEM NO | (2) SMR CODE | (3) CAGEC | (4) PART NUMBER | (5) DESCRIPTION AND USABLE ON CODES (UOC) | (6) QTY |
|---|---|---|---|---|---|---|
| | | | | | GROUP 13 WHEELS | |
| | | | | | GROUP 1311 HUBS AND DRUMS | |
| | | | | | FIG. 31 HUB AND BEARINGS, M967, M969, AND M970 | |
| * | 1 | PAOZZ | 78500 | S7810S | SCREW WHEEL HUB EXCEPT M970 SN TC-0843, TC-0843, TC-0844, AND TC-103 THRU TC-178 UOC:C70,C72,C73 | 8 |
| * | 2 | PAOFF | 78500 | 3219G3647 | BRAKE DRUM EXCEPT M970 SN TC-0843, TC-0844, AND TC-103 THRU TC-178 UOC:C70,C72,C73 | 2 |
| * | 3 | PAOZZ | 78500 | S-2810 | BOLT,MACHINE EXCEPT M970 SN TC-0843, TC-0844, AND TC-103 THRU TC-178 UOC:C70,C72,C73 | 10 |
| * | 4 | PAOZZ | 78500 | WA18C | WASHER,LOCK EXCEPT M970 SN TC-0843 TC-0844 AND TC-103 THRU TC-178 UOC:C70,C72,C73 | 10 |
| * | 5 | PAOZZ | 78500 | 3262-L-90 | COVER,ACCESS EXCEPT M970 SN TC-0843, TC-0844, AND TC-103 THRU TC-178 UOC:C70,C72,C73 | 2 |
| * | 6 | PAOZZ | 78500 | 2208-B-314 | GASKET EXCEPT M970 SN TC-0843, TC-0844, AND TC-103 THRU TC-178 UOC:C70,C72,C73 | 2 |
| * | 7 | PAOZZ | 78500 | 1227P328 | NUT,PLAIN,OCTAGON OUTER BEARING EXCEPT M970 SN TC-0843,TC-0844, AND TC-103 THRU TC-178 UOC:C70,C72,C73 | 2 |
| * | 8 | PAOZZ | 63734 | 1229V48 | SPACER,PLATE.. EXCEPT M970 SN TC-0843, TC-0844, AND TC-103 THRU TC-178 UOC:C70,C72,C73 | 2 |
| * | 9 | PAOZZ | 78500 | 1227A547 | NUT,PLAIN,OCTAGON INNER BEARING EXCEPT M970 SN TC-0843, TC-0844, AND TC-103 THRU TC-178 UOC:C70,C72,C73 | 2 |
| * | 10 | PAOZZ | 78500 | 596 | CONE AND ROLLERS,TA EXCEPT M970 SN TC-0843, TC-0844, AND TC-103 THRU TC-178 UOC:C70,C72,C73 | 2 |
| * | 11 | PAOZZ | 78500 | 1199M177 | NUT,PLAIN,SINGLE L.H. THREAD EXCEPT M970 SN TC-0843, TC-0844, AND TC-103 THRU TC-178 UOC:C70,C72,C73 | 5 |
| * | 12 | PAOZZ | 96906 | MS53068-1 | NUT,CAP,DUAL WHEEL INNER LEFT HAND THREAD EXCEPT M970 SN TC-0843, TC-0844, AND TC-103 THRU TC-178 UOC:C70,C72,C73 | 5 |



Current part is item (18) on diagram. Available at www.oshkoshequipment.com

Current part is item (18) on diagram. Available at www.oshkoshequipment.com



| (1) ITEM NO | (2) SMR CODE | (3) CAGEC | (4) PART NUMBER | (5) DESCRIPTION AND USABLE ON CODES (UOC) | (6) QTY |
|---|---|---|---|---|---|
| * 13 | PAOZZ | 78500 | 593-A | CONE AND ROLLERS,TA EXCEPT M970 SN TC-0843, TC-0844, AND TC-103 THRU TC-178 UOC:C70,C72,C73 | 2 |
| * 14 | PAOZZ | 78500 | A1205N664 | SEAL,PLAIN ENCASED OIL,HUB EXCEPT M970 SN TC-0843, TC-0844, AND TC-103 THRU TC-178 UOC:C70,C72,C73 | 2 |
| * 15 | PAOZZ | 78500 | 1199-F-1436-Z | RING,WIPER EXCEPT M970 SN TC-0843, TC-0844, AND TC-103 THRU TC-178 UOC:C70,C72,C73 | 2 |
| * 16 | XBOOO | 78500 | A1-333-Z-2182 | HUB AND STUD ASSY L.H EXCEPT M970 SN TC-0843, TC-0844, AND TC-103 THRU TC-178 UOC:C70,C72,C73 | 1 |
| * 17 | PAOZZ | 56933 | 20X-405-C | .BOLT,RIBBED SHOULDE EXCEPT M970 SN TC-0843,TC-0844, AND TC-103 THRU TC-178 UOC:C70,C72,C73 | 5 |
| * 18 | PAOZZ | 78500 | 592-A | .CUP,TAPERED ROLLER EXCEPT M970 SN TC-0843, TC-0844, AND TC-103 THRU TC-178 UOC:C70,C72,C73 | 2 |
| * 19 | XBOOO | 78500 | A-333-X-2182 | .HUB AND CUP ASSEMBL EXCEPT M970 SN, TC-0843, TC-0844, AND TC-103 THRU TC-178 UOC:C70,C72,C73 | 1 |
| * 20 | XBOOO | 56933 | A2-333-X-2182 | HUB & STUD ASSY,R.H EXCEPT M970 SN TC-0843, TC-0844, AND TC-103 THRU TC-178 UOC:C70,C72,C73 | 1 |
| * 21 | PAOZZ | 78500 | 20X404 | .BOLT, RIBBED SHOULDE EXCEPT M970 SN TC-0843, TC-0844, AND TC-103 THRU TC-178 UOC:C70,C72,C73 | 1 |
| * 22 | PAOZZ | 78500 | 592-A | .CUP,TAPERED ROLLER EXCEPT M970 SN TC-0843, TC-0844, AND TC-103 THRU TC-178 UOC:C70,C72,C73 | 2 |
| * 23 | XBOOO | 78500 | A-333-X-2182 | .HUB AND CUP ASSY EXCEPT M970 SN TC-0843, TC-0844, AND TC-103 THRU TC-178 UOC:C70,C72,C73 | 1 |
| * 24 | PAOZZ | 78500 | 1199N118 | NUT,CAP PUTER EXCEPT M970 SN TC-0843, TC-0844, AND TC-103 THRU TC-178 UOC:C70,C72,C73 | 5 |
| * 25 | PAOZZ | 96906 | MS53068-2 | NUT,CAP,DUAL WHEEL EXCEPT M970 SN TC-0843, TC-0844, AND TC-103 THRU TC-178 UOC:C70,C72,C73 | 1 |
| | | | | END OF FIGURE | |



Current part is item (18) on diagram. Available at www.oshkoshequipment.com